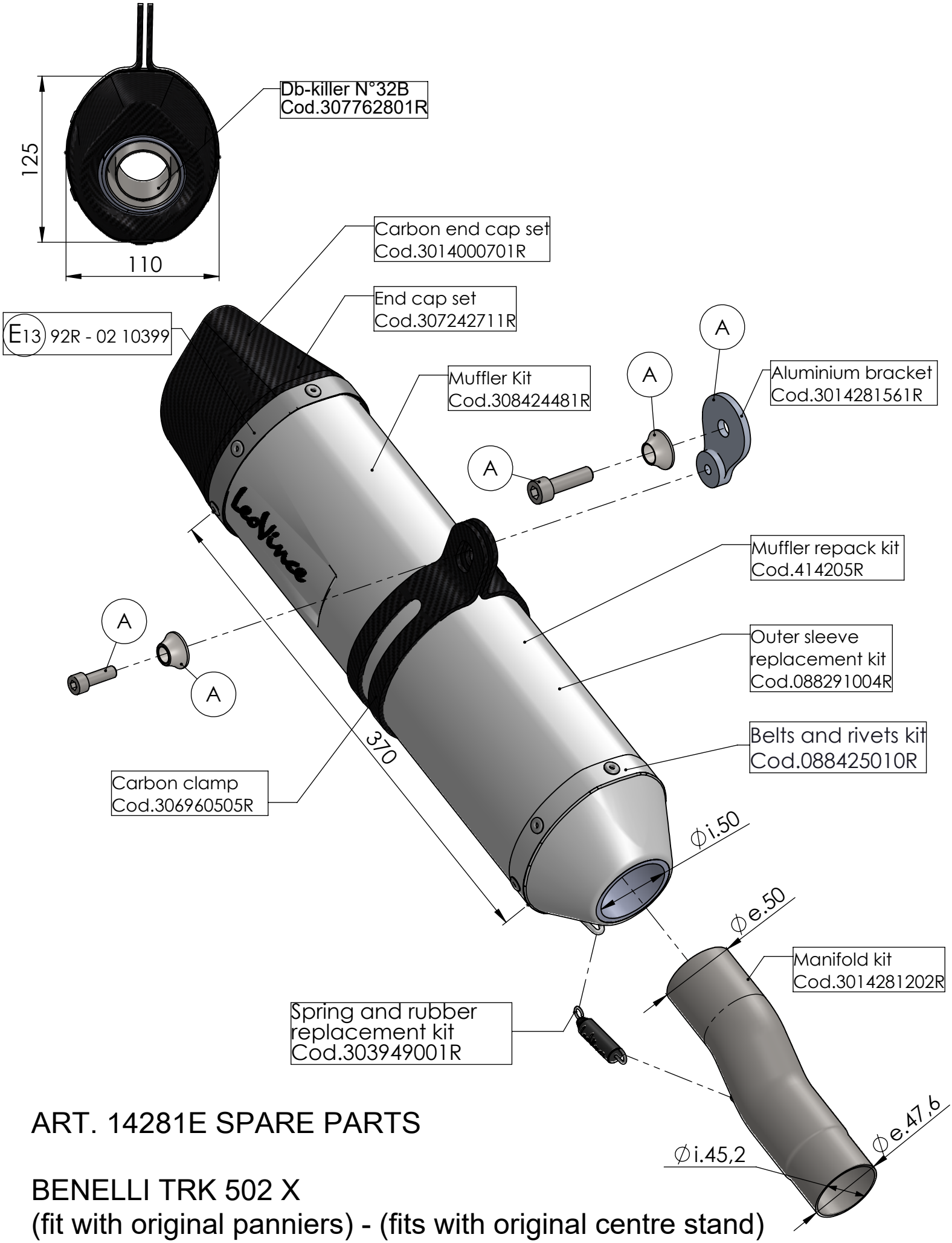

ART. 14281E SPARE PARTS

BENELLI TRK 502 X
(fit with original panniers) - (fits with original centre stand)

FITTING KIT Cod.3014281601R